Humanscale®

Function
Simplicity
Longevity

Seating Solution	Pg No.
Freedom Headrest	04
Freedom Task	13
Liberty Chairs	17
Diffrient World Chair	22
Diffrient Smart Chair	27

Product	Pg No.
Monitor Arms	31
Keyboard Tray	39
Ergonomic Office Tools	41
Sit-Stand Desks & Solutions	48

Seating Solutions

FREEDOM HEADREST

The Gold Standard in Office Seating

ERGONOMIC SUPPORT THROUGH INTUITIVE COUNTER-BALANCE MECHANISM

SYNCHRONOUS ARMRESTS AND DYNAMIC HEADREST FOR CONTINUOUS COMFORT

CUSTOM FIT ADAPTABILITY FOR ALL BODY TYPES

A true design icon, the Freedom chair proves that ergonomics can be beautiful. Created by Niels Different, Freedom automatically adjusts to every user. Designed to eliminate the need for manual controls, it features a sophisticated weight sensitive, self-locking recline mechanism. Its unique form has a timeless aesthetic that complements any workspace.

Seating Solutions

FREEDOM HEADREST GRAPHITE FABRIC

Chase (04)

FREEDOM HEADREST POLISHED ALUMINIUM FABRIC

Relay (02)

DISCOVER THE SPRINT (PS) COLOR RANGE

FREEDOM HEADREST

The Gold Standard in Office Seating

Finish (11)

Plunge (16)

Train (27)

Speed (30)

Opponent (34)

Stretch (31)

Ready (18)

Energy (26)

Seating Solutions

FREEDOM HEADREST GRAPHITE LEATHER - TICINO

Pebble (11Y)

FREEDOM HEADREST POLSIHED ALUMINIUM LEATHER - TICINO

Sand (31V)

TICINO

FREEDOM HEADREST

The Gold Standard in Office Seating

Obsidian (10N)

Umber (21A)

Canyon (22C)

Charcoal (12M)

Glacier (13W)

Seating Solutions

FREEDOM HEADREST GRAPHITE LEATHER - CORVARA

Saddle (23T)

FREEDOM HEADREST POLSIHED ALUMINIUM LEATHER - CORVARA

Mineral (11V)

CORVARA

FREEDOM HEADREST

The Gold Standard in Office Seating

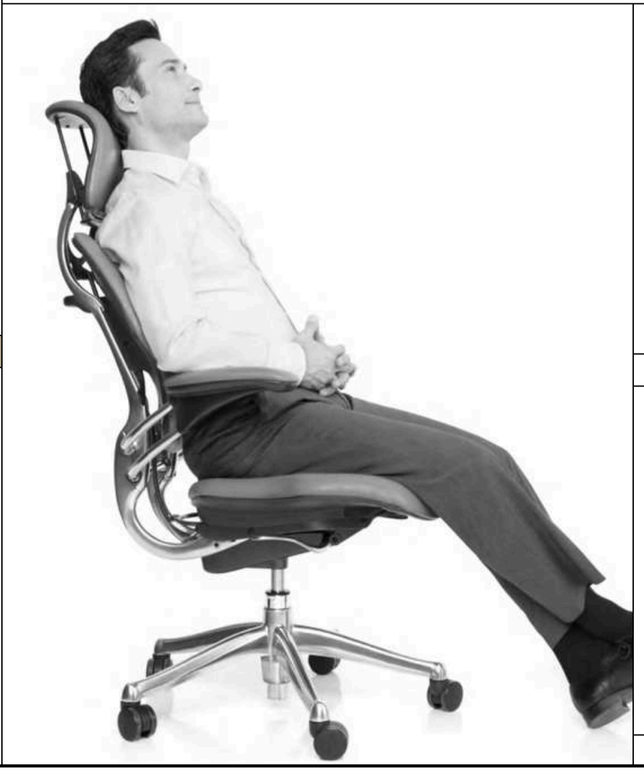

Onyx (10N)

Java (21A)

Jasper (71H)

Midnight (57N)

Seating Solutions

FREEDOM HEADREST

The Gold Standard in Office Seating

DETAILS

TECH SPECS

Chair Width: 690mm (27.25")
Base Width: 635mm (25")
Height: 510mm (20")
Weight: 17kg (38 lbs) with arms / 15.5kg (34 lbs) without arms

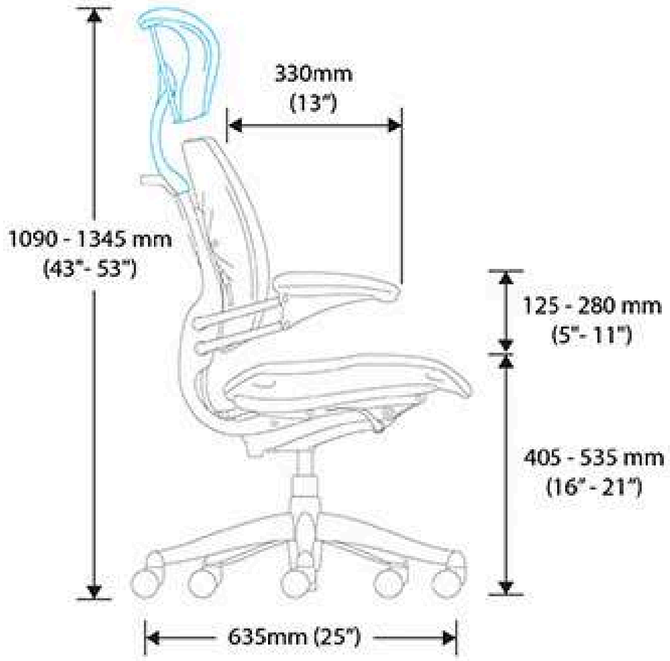

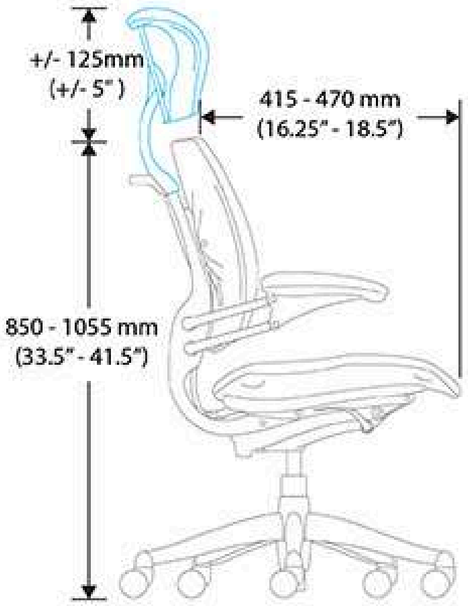

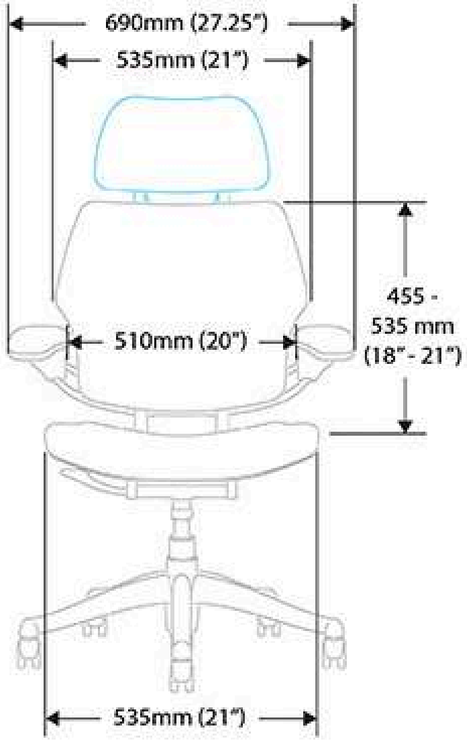

Seating Solutions

SADDLE/PONY

Ultimate Versatility. Ultimate Comfort

MODULAR CUSHION FOR EASY REPLACEMENT

OPTIONAL FOOT RING AND HIGH CYLINDERS FOR SPECIFIC APPLICATIONS

TRIANGULAR CUSHION ALLOWS MULTIPLE SITTING POSITIONS

Saddle and Pony task stools are the most comfortable, versatile and ergonomic stools ever made. The original Saddle and the compact Pony Saddle make sitting comfortable and workplace movement simple while complementing any workspace or home office. Sitting on stools in this position lowers the thighs, opens up the hips and allows for increased circulation. The posture also reduces pressure points on the tailbone, enabling long-term comfort.

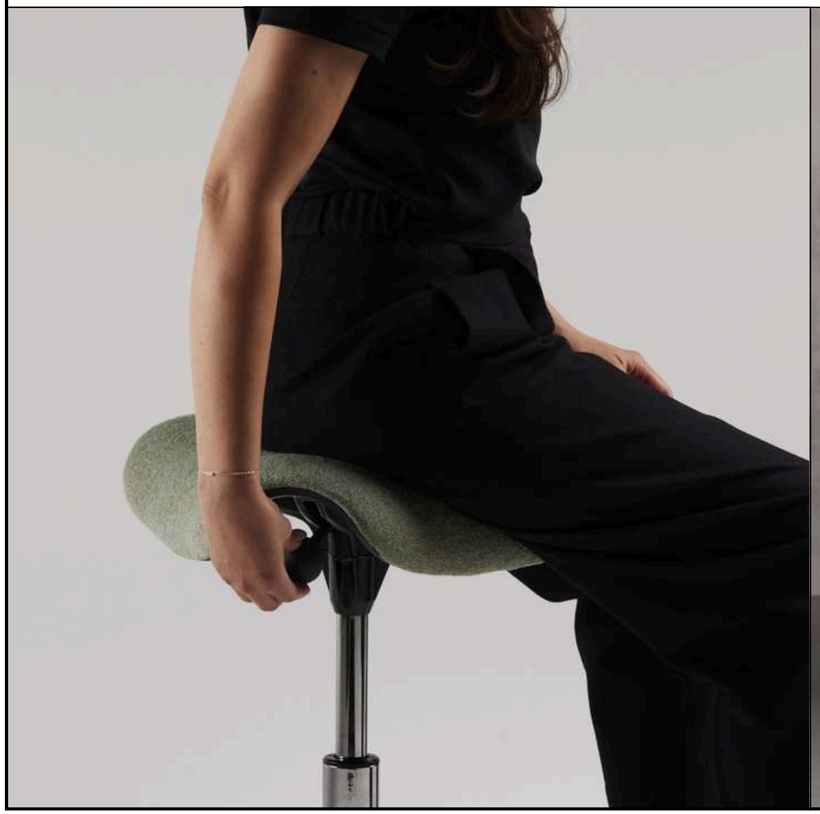

Seating Solutions

FREEDOM SADDLE GRAPHITE FABRIC

Chase (04)

FREEDOM SADDLE POLISHED FABRIC

Relay (02)

DISCOVER THE SPRINT (PS) COLOR RANGE

SADDLE/PONY

Ultimate Versatility. Ultimate Comfort

Finish (11)

Plunge (16)

Train (27))

Speed (30)

Stretch (31)

Opponent (34)

Ready (18)

Energy (26)

Seating Solutions

FREEDOM SADDLE GRAPHITE LEATHER - TICINO

Canyon (22)

FREEDOM SADDLE POLISHED LEATHER - TICINO

Glacier (13)

TICINO

SADDLE/PONY

Ultimate Versatility. Ultimate Comfort

Obsidian (10)

Umber (21)

Pebble (11)

Charcoal (12)

Sand (31)

Seating Solutions

SADDLE/PONY

Ultimate Versatility. Ultimate Comfort

DETAILS

TECH SPECS

Pony Width: 405mm (16”) / Saddle Width 560mm (22")
Base Size: 560mm (22”)
Seat Height Range: 410 - 825 mm (16.125” – 32.5”)
Recline Range: None
Chair Weight: Less than 4.8kg (10.6 lbs.)
Stackable No

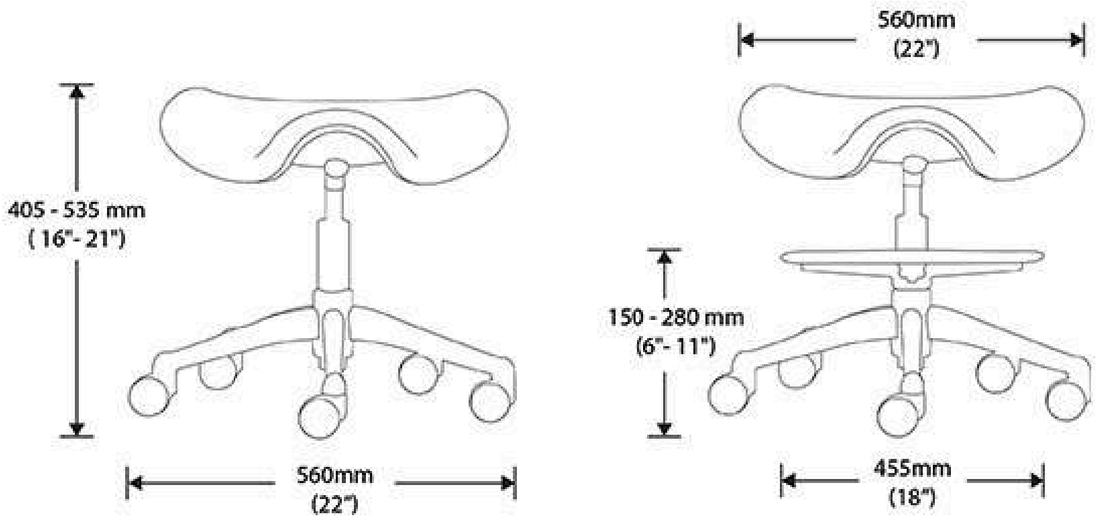

Seating Solutions

FREEDOM TASK

Revolutionizes the way people sit

SLEEK INTEGRATION WITH MODERN OFFICE AESTHETICS

CONTOURED SCULPTED BACKREST FOR ERGONOMIC SUPPORT

THICK CUSHIONS DESIGNED FOR LASTING COMFORT

Designed to complement any space and integrate effortlessly into the modern office, the Freedom task chair offers comfort, style and complete ease of use.

Seating Solutions

FREEDOM MID BACK GRAPHITE FABRIC

Block (29)

FREEDOM MID BACK POLISHED ALUMINIUM FABRIC

Line (33)

DISCOVER THE SPRINT (PS) COLOR RANGE

FREEDOM TASK

Revolutionizes the way people sit

Start (10)

Victory (32)

Hurdle (01)

Gold (15)

Runner (17)

Exercise (25)

Silver (28)

Focus (37)

Seating Solutions

FREEDOM MID BACK GRAPHITE LEATHER -TICINO

Canyon (22C)

FREEDOM MID BACK POLSIHED ALUMINIUM LEATHER - TICINO

Glacier (13W)

TICINO

FREEDOM TASK

Revolutionizes the way people sit

Obsidian (10N)

Umber (21A)

Pebble (11Y)

Charcoal (12M)

Sand (31V)

Seating Solutions

FREEDOM MID BACK GRAPHITE LEATHER -CORVARA

Midnight (57N)

FREEDOM MID BACK POLSIHED ALUMINIUM LEATHER - CORVARA

Jasper (71H)

CORVARA

FREEDOM TASK

Revolutionizes the way people sit

Onyx (10N)

Java (21A)

Saddle (23T)

Mineral (11V)

Seating Solutions

LIBERTY

Patented, form-sensing mesh backrest provides customized support for each unique sitter

AUTOMATIC LUMBAR SUPPORT WITH INTUITIVE COMFORT

MINIMALIST DESIGN WITH FORM-SENSING MESH TECHNOLOGY

MECHANISM-FREE RECLINE FOR SEAMLESS MOVEMENT

Unlike single-panel mesh chairs that require external lumbar devices, Liberty's patented, form sensing mesh backrest provides customized support for each unique sitter.

Seating Solutions

LIBERTY BLACK

Heat (38)

LIBERTY OCEAN

Nutrition (39)

LIBERTY POLISHED ALUMINIUM

Competitor (40)

Champion (41)

Relay (02)

Chase (04)

DISCOVER THE SPRINT (PS) COLOR RANGE

LIBERTY

Patented, form-sensing mesh backrest provides customized support for each unique sitter

Finish (11)

Speed (30)

Train (27)

Plunge (16)

Seating Solutions

LIBERTY LEATHER - TICINO UPGRADE

TICINO

LIBERTY

Patented, form-sensing mesh backrest provides customized support for each unique sitter

Charcoal (12M)

Obsidian (10N)

Umber (21A)

Canyon (22C)

Pebble (11Y)

Sand (31V)

Glacier (13W)

Seating Solutions

LIBERTY LEATHER

CORVARA

LIBERTY

Patented, form-sensing mesh backrest provides customized support for each unique sitter

Java (21A)

Onyx (10N)

Midnight (57N)

Jasper (71H)

Saddle (23T)

Mineral (11V)

Seating Solutions

LIBERTY

Patented, form-sensing mesh backrest provides customized support for each unique sitter

DETAILS

TECH SPECS

Chair Width: 675mm (26.5”) Arms / 535mm (21”) Armless
Base Size: 635mm (25“)
Seat Height Range: 374 - 494 mm (14.72” - 19.45")
Recline Range 17° backrest tilt + 7° backrest tilt
Chair Weight: (18 lbs) arms /(17 lbs) armless
Stackable: No

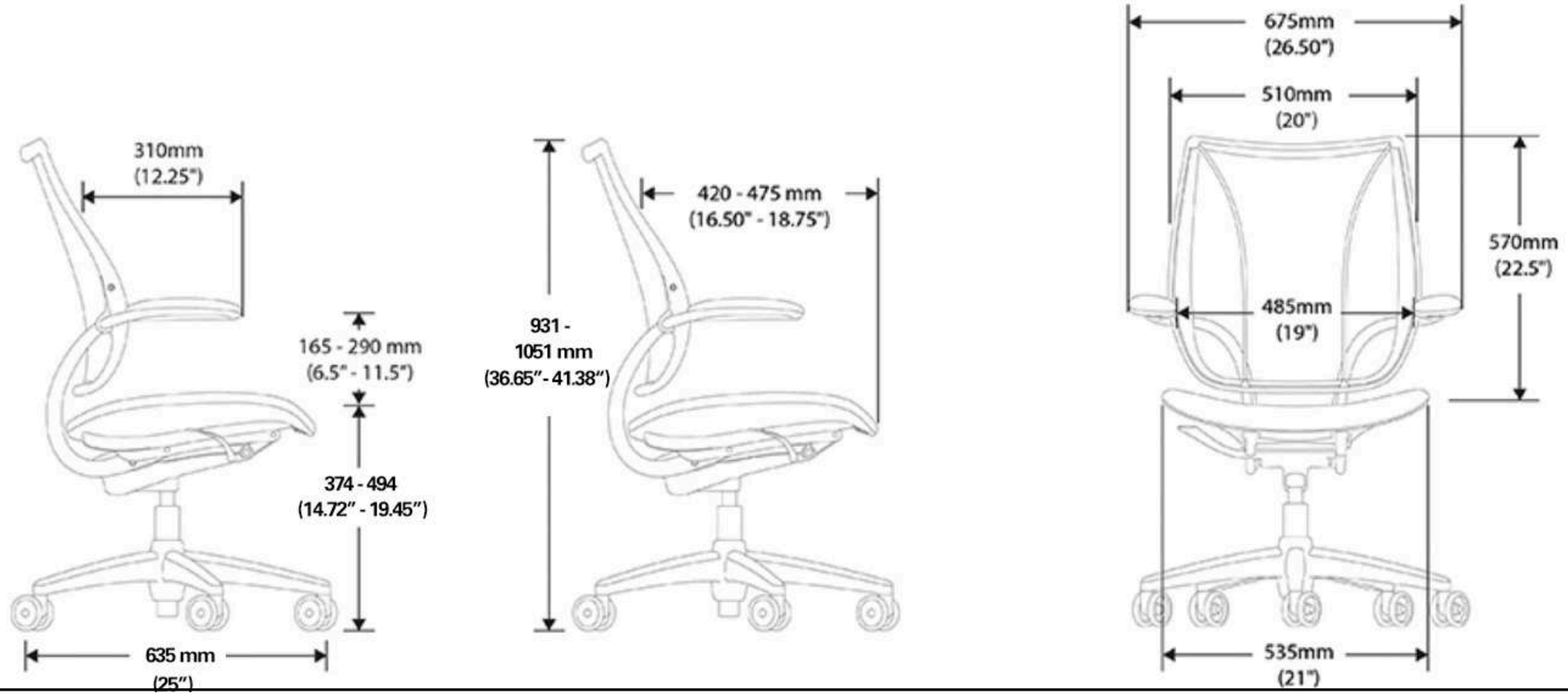

Seating Solutions

DIFFRIENT WORLD CHAIR

High Performance. Ultimate Simplicity.

MADE TO FIT 95% OF ALL BODY TYPES

PIVOTING BACKREST

FORM SENSING MESH

SELF-ADJUSTING RECLINE

Comprised of only eight major parts, Diffrient World is Humanscale's most minimal task chair. The standard cushion seat is replaced with a soft edge non-stretch mesh, relieving pressure on the knees and contact stress behind the thighs

Poppy Seed (1A)

DIFFRIENT WORLD CHAIR

High Performance. Ultimate Simplicity.

World One Chair Mesh Seat

Cornflower (50)

Black (10)

Bayberry (35)

Caraway (1B)

Seating Solutions

DIFFRIENT WORLD CHAIR

High Performance. Ultimate Simplicity.

Diffrient World Chair Mesh Seat

DIFFRIENT WORLD CHAIR
MESH SEAT

Black (10)

DIFFRIENT WORLD CHAIR
- GREY MESH SEAT

Poppy Seed (1A)

DIFFRIENT WORLD CHAIR -
WHITE MESH SEAT

Caraway (1B)

Bayberry (35)

Cornflower (50)

Seating Solutions

DIFFRIENT WORLD CHAIR
FABRIC SEAT

Exercise (25)

DIFFRIENT WORLD CHAIR -
GREY FABRIC SEAT

Opponent (34)

DIFFRIENT WORLD CHAIR - WHITE
FABRIC SEAT

Hurdle (01)

Stretch (31)

Ready (18)

Energy (26)

DISCOVER THE SPRINT (PS) COLOR RANGE

DIFFRIENT WORLD CHAIR

High Performance. Ultimate Simplicity.

Diffrient World Chair Fabric Seat

Start (10)

Runner (17)

Gold (15)

Victory (32)

Seating Solutions

DIFFRIENT WORLD CHAIR

High Performance. Ultimate Simplicity.

DETAILS

TECH SPECS

Chair Width: 660mm (25.95”) Arms / 495mm (19.49”) Armless
Base Size: 635mm (25")
Seat Height Range: 374 - 494 mm (14.72” – 19.44”)
Recline Range: 17° recline + 8° backrest tilt
Chair Weight: 14kg (31 lbs.) arms / 12.9kg (29 lbs.) armless
Stackable: No

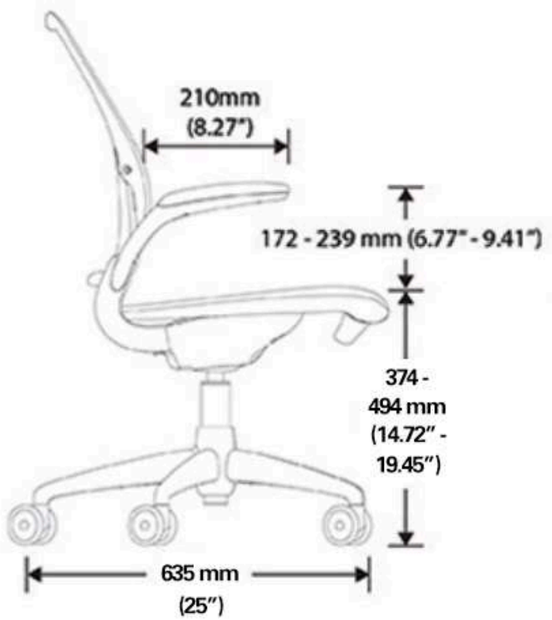

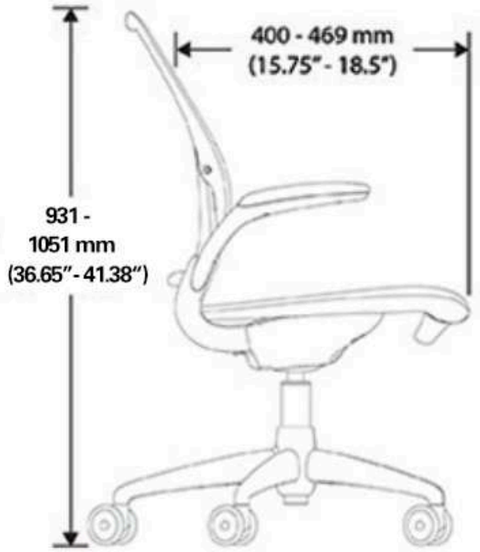

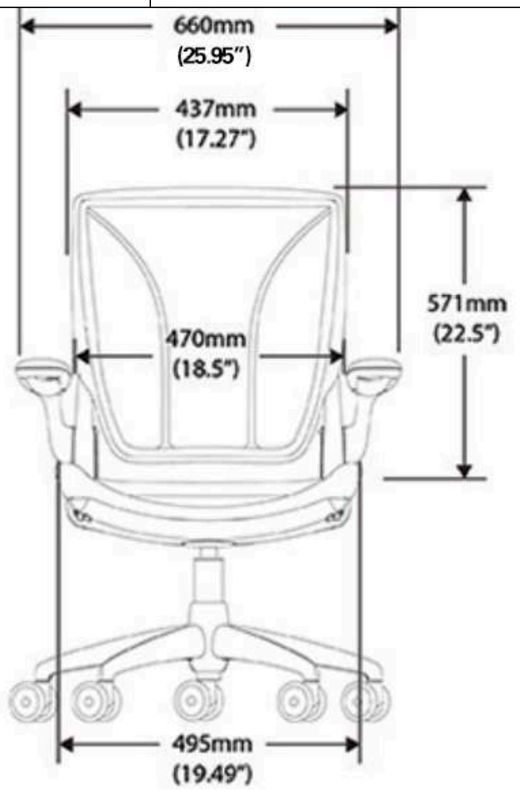

Seating Solutions

DIFFRIENT SMART

Tri-panel backrest fits like a perfectly tailored shirt to provide exceptional lumbar support.

DISTINCTIVE LINEAR DESIGN THAT COMPLIMENT ANY ENVIRONMENT

UNIQUE ARM DESIGN ATTACHES TO THE BACK FRAME TO PROVIDE SUPPORT DURING FULL RANGE OF RECLINE

A VARIETY OF HIGH-PERFORMANCE TEXTILES AND PROPRIETARY MESHES COMPLEMENT THE CHAIR'S FORM

The Diffrient Smart chair is an intelligent mesh task chair with a striking linear aesthetic that complements any environment. Engineered to provide automatic lumbar support for every user, as well as simplicity and ease of use, Diffrient Smart offers comfort, style and flexibility. Diffrient Smart, like Humanscale's Liberty and Diffrient World chairs, uses Humanscale's revolutionary Form-Sensing Mesh Technology and mechanism-free recline for perfect support for every user.

Seating Solutions

DIFFRIENT SMART
CHAIR BLACK

Exercise (25)

DIFFRIENT SMART
OCEAN CHAIR BLACK

Opponent (34)

DIFFRIENT SMART CHAIR
POLISHED

Hurdle (01)

Stretch (31)

Ready (18)

Energy (26)

DISCOVER THE SPRINT (PS) COLOR RANGE

DIFFRIENT SMART

Tri-panel backrest fits like a perfectly tailored shirt to provide exceptional lumbar support.

Start (10)

Runner (17)

Gold (15)

Victory (32)

Seating Solutions

DIFFRIENT SMART

Tri-panel backrest fits like a perfectly tailored shirt to provide exceptional lumbar support.

DETAILS

TECH SPECS

Chair Width: 673mm (26.5”) Arms / 533mm (21”) Armless
Base Size: 660mm (26”)
Seat Height Range: 413 - 579 mm (16.5” – 22.8”)
Recline Range: 18° recline + 8° backrest tilt
Chair Weight: 15kg (34 lbs) arms / 14kg (31 lbs) armless
Stackable: No

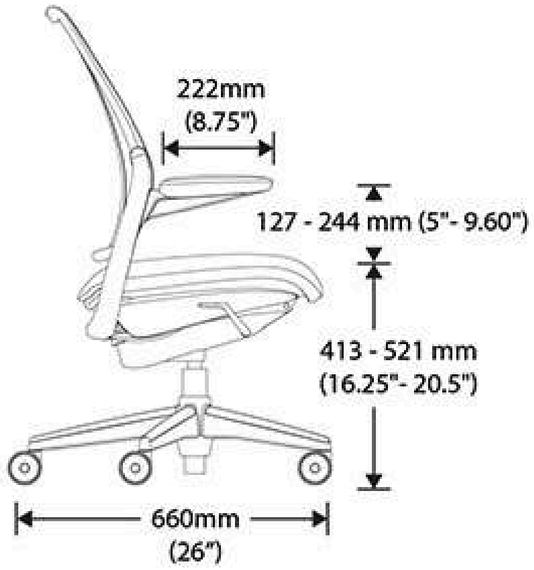

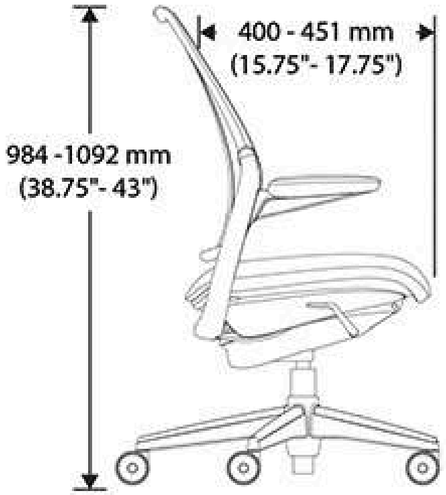

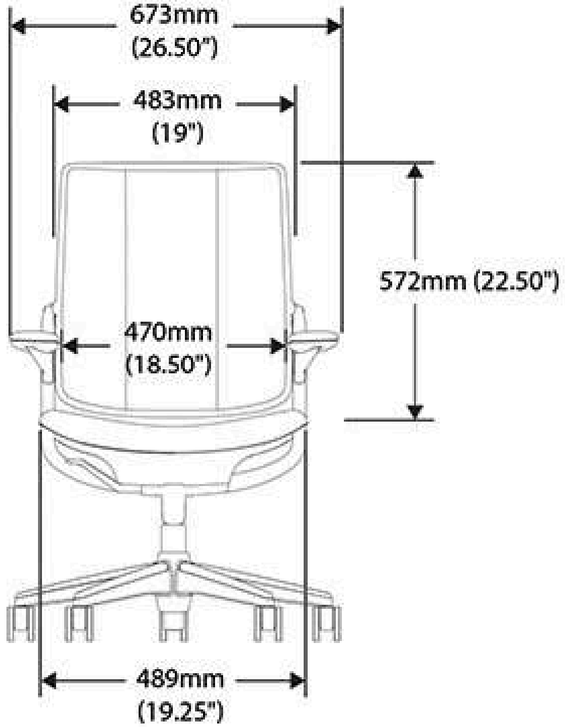

Seating Solutions

DISCOVER THE SPRINT COLOR RANGE

Relay (02)	Chase (04)	Finish (11)	Plunge (16)	Train (27)	Speed (30)
Stretch (31)	Opponent (34)	Ready (18)	Energy (26)	Start (10)	Victory (32)
Hurdle (01)	Gold (15)	Runner (17)	Exercise (25)	Silver (28)	Block (29)
Line (33)	Focus (37)	Heat (38)	Nutrition (39)	Competitor (40)	Champion (41)

FREEDOM TASK

LIBERTY CHAIRS

DIFFRIENT SMART

Humanscale

Monitor Arms

M2.1 / M8.1 / M10 MONITOR ARMS

ALLOW THE USER TO PLACE THEIR SCREEN(S) AT AN OPTIMAL ERGONOMIC POSITION

FLEXIBLE RUBBER CHANNELS EASILY HIDE, PROTECT, AND MANAGE YOUR CABLES

A BUILT-IN COUNTERBALANCE INDICATOR

In today's fast paced, agile workspace, there's no time for discomfort. Humanscale's next generation monitor arm line instantly personalizes any workstation for improved comfort, health and productivity. Designed for unprecedented adaptability, our monitor arms focus on ergonomics and the use of technology, while featuring ultra-sleek aesthetics.

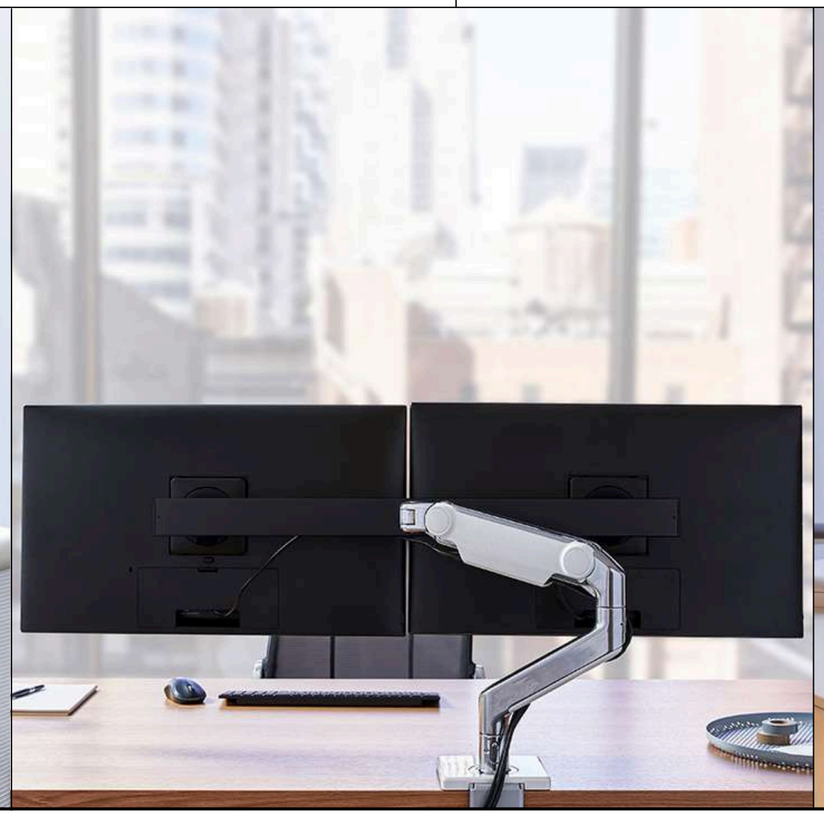

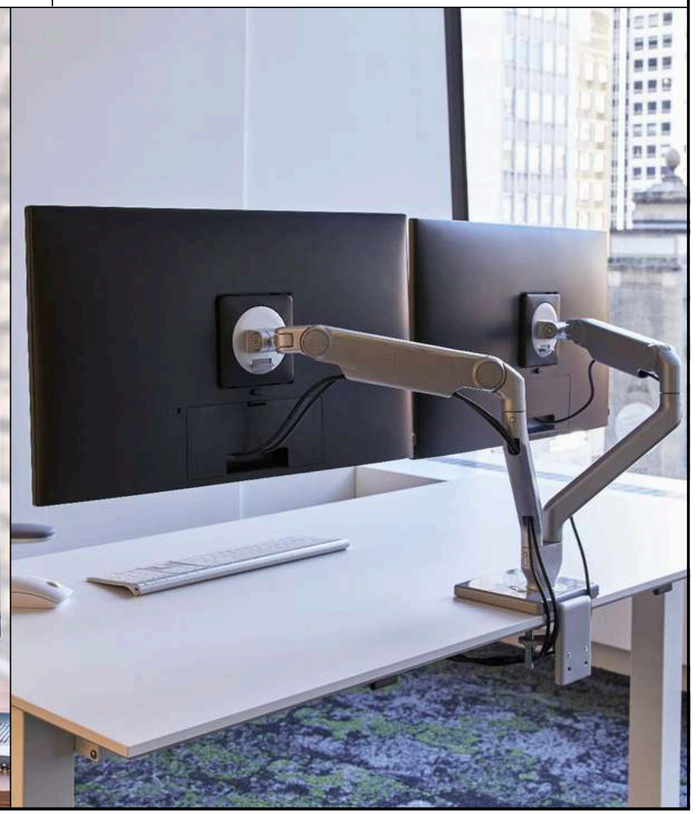

Monitor Arms

M2.1 MONITOR ARM SINGLE

M2.1 MONITOR ARM DUAL

M FLEX M2.1 DUAL
DYNAMIC SLIDER

M2.1 MONITOR ARM

Monitor Arms

M8.1 MONITOR ARM

M8.1 MONITOR ARM SINGLE

M8.1 MONITOR ARM DUAL WITH CROSS BAR W/O HANDLE

M8.1 MONITOR ARM DUAL WITH CROSS BAR AND HANDLE

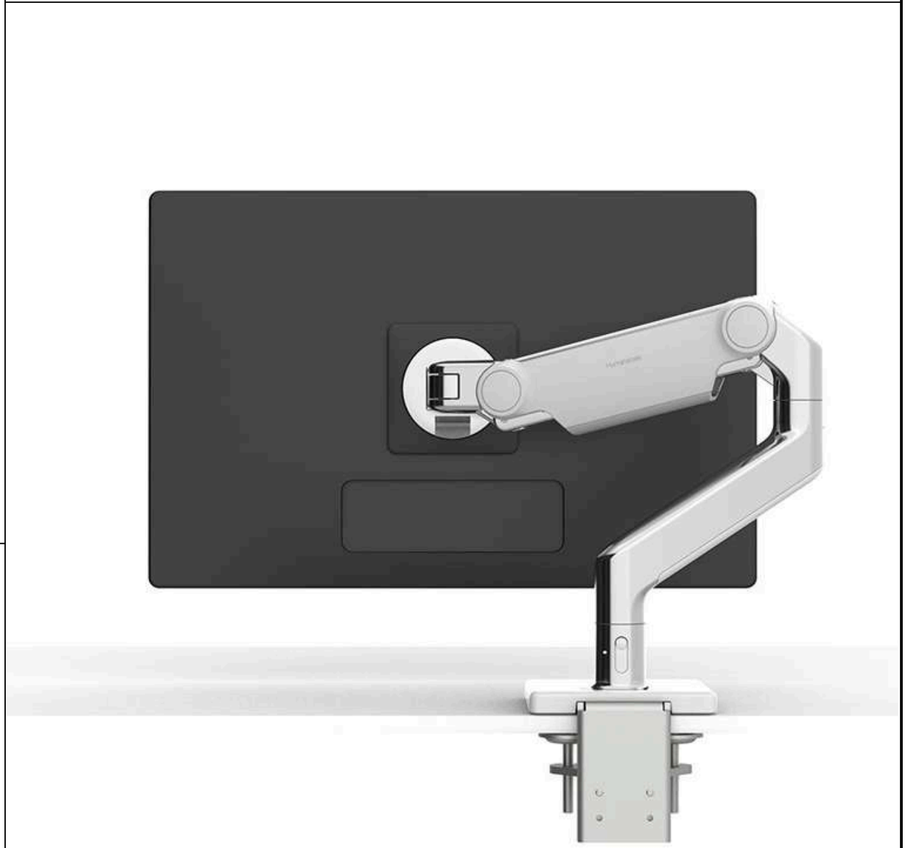

Monitor Arms

M8.1 MONITOR ARM

DETAILS

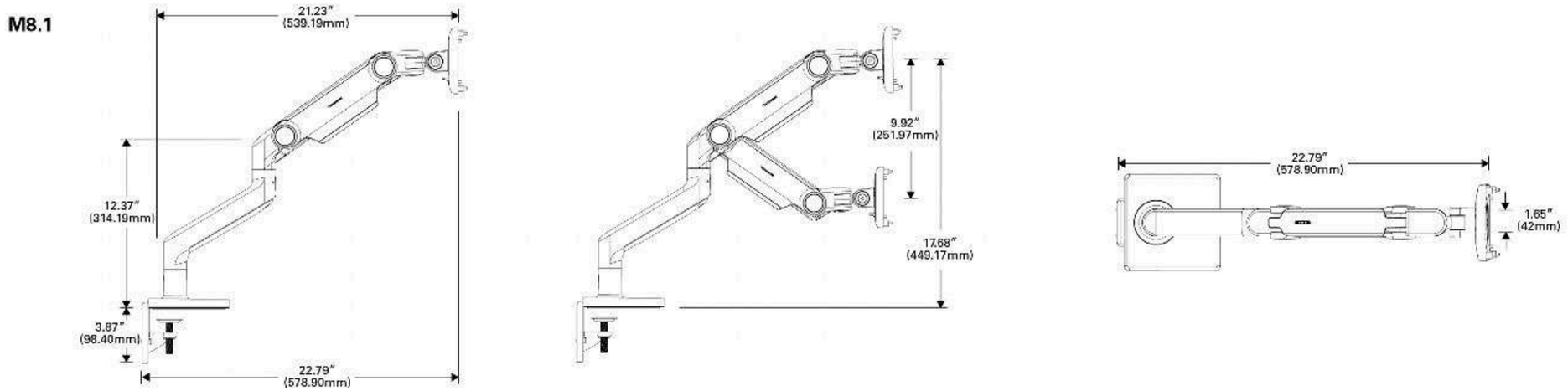

Monitor Arms

M10.1 MONITOR ARM SINGLE

M10.1 MONITOR ARM CROSSBAR FOR 3 MONITORS, WITH HANDLE

M10.1 MONITOR ARM

Monitor Arms

M CONNECT 2 M2.1 - 100 W

M CONNECT 2 M8.1 &
M10 - 100 W

M CONNECT 2 M/FLEX -
100 W

M CONNECT 2 BASE

Monitor Arms

Monitor Arms

M2.1 / M8.1 / M10 MONITOR ARMS

DETAILS

Height Adjustment	M2.1 170mm (6.7") - 434mm (17.1") M8.1 193mm (7.6") - 449mm (17.7") M10 193mm (7.6") - 449mm (17.7")
Colour Options	Polished Aluminium with White Trim Silver with Grey Trim Black with Black Trim
Warranty	M2.1 and M8.1: 15 year M10: 10 year

Monitor Weight Capacity	Standard Single or Dual Monitors 2.3 - 7 kg (5.5 -15.5 lbs.) **M2.1**	
	Single 2.7 - 12.7 kg (6 - 28 lbs.) **M8.1**	Dual Crossbar holds up to 5.6 kg (12.5 lbs.) per monitor
	Heavy Single up to 9 -21.8 kg (20 - 48 lbs.) **M10**	Triple Crossbar holds up to 4.7 kg (10.5 lbs.) per monitor 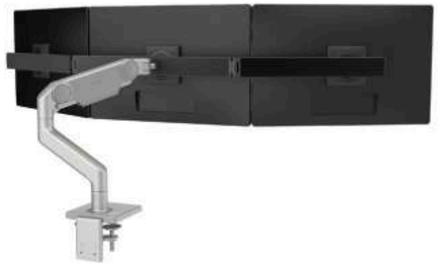

Keyboard Systems

KEYBOARD SYSTEMS

INTUITIVE HEIGHT ADJUSTMENT THAT REQUIRES NO LOCKS, LEVERS OR CONTROLS

DIAL-A-TILT POSITIONING THAT ALLOWS YOU TO TYPE AT THE ANGLE MOST COMFORTABLE FOR YOU

ULTRA-THIN PROFILE TO PROVIDE MAXIMUM KNEE CLEARANCE

Humanscale patented keyboard systems have effortless height and angle adjustment. Promoting negative tilt keying, the keyboard platforms will not go into a positive tilt. Humanscale keyboard trays are solidly anchored to any work surface, and shape to specific user needs. Hypoallergenic Gel palm supports offer height and durability, and are designed to be compatible with human skin.

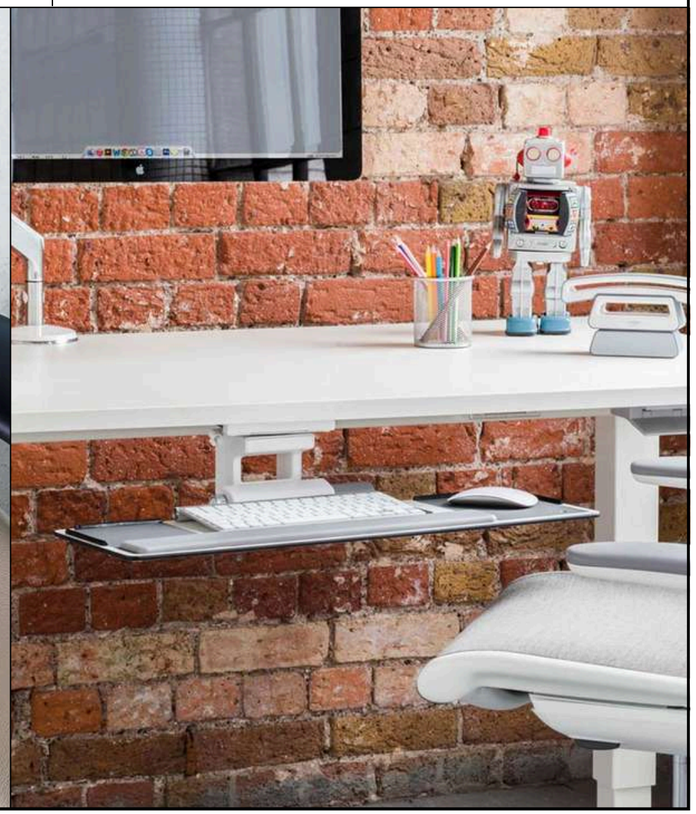

Keyboard Systems

KEYBOARD TRAY

6G 900 KEYBOARD TRAY

6G BIG 500 KEYBOARD TRAY

6G 259 KEYBOARD TRAY
FOR FLOAT

Ergonomic Office Tools

CPU HOLDER

ROTATES A FULL 360° FOR COMPLETE ACCESS TO CABLES AND PORTS

ROTATES A FULL 360° FOR COMPLETE ACCESS TO CABLES AND PORTS

With tool-free installation and a sleek silhouette, the CPU600 offers convenient access to ports and drives. Designed to allow for quick hardware upgrades and repairs, it evolves with the user's technology for easy maintenance and use. This flexible workspace solution fits computers that are 90mm (3.5") to 230mm (9") wide and 306mm (12") to 510mm (20") tall.

Ergonomic Office Tools

CPU HOLDER

CPU600

CPU200

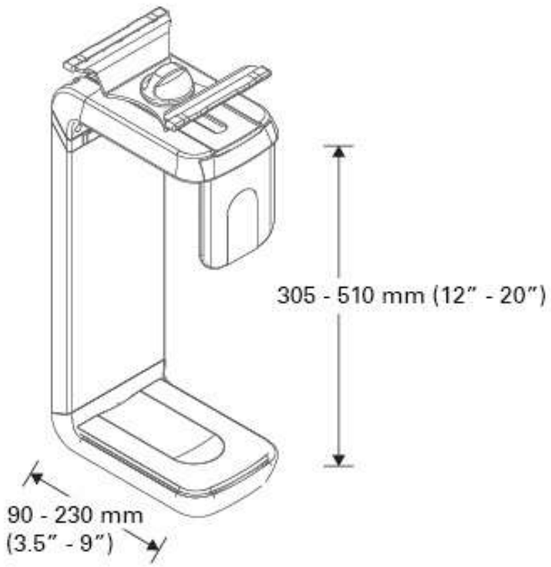

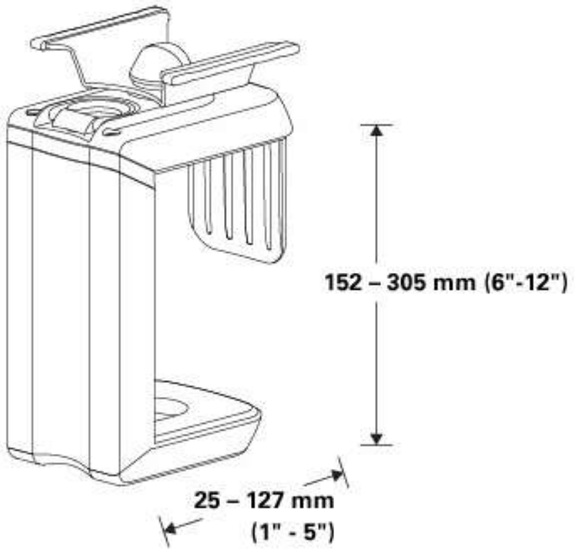

Ergonomic Office Tools

THIN CLIENT HOLDER - UNDER DESK

THIN CLIENT HOLDER - CROSS BEAM

THIN CLIENT HOLDER

Thin Client Holder is designed to provide convenient access by easily mounting underneath the worksurface. A simple solution that accommodates most thin clients 2.5cm (1”) – 5cm (2”) and up to 2.27 kg (5 lbs.).

Ergonomic Office Tools

	Thin Client Holder	CPU 200	CPU 600
Accommodates	Thin Clients 25mm (1") – 50mm (2") Thick	CPU Towers 25mm (1") - 127mm (5") Wide, 152mm (6") - 305mm (12") Height	CPU Towers 89mm (3.5") - 228mm (9") Wide 305mm (12") - 500mm (20") Tall
Weight Capacity	Up to 2.27 kg (5 lbs.)	Up to 6.8 kg (15 lbs.)	Up to 22.6 kg (50 lbs.)
Mounting Orientation	Horizontal	Vertical	Vertical
Swivel Capability	None	360°	360°
Finish	Black	Black/ Brushed Aluminium or White/ Brushed Aluminium	Black/ Brushed Aluminium or White/ Brushed Aluminium
Materials	Steel, ABS, POM, 20% Glass Filled Nylon, Silicone	Aluminium and cold-rolled, powder-coated steel	Aluminium and cold-rolled, powder-coated steel and plastic
Warranty	15 Years	15 Years	15 Years

Ergonomic Office Tools

NOTEBOOK MANAGER

ELEVATES NOTEBOOK DISPLAY TO A HEALTHY AND COMFORTABLE LEVEL

ONE-TOUCH SWIVEL BASE ENCOURAGES COLLABORATION

HEAT VENTILATION

CONVENIENT CABLE MANAGEMENT

TECH SPECS

Length: 345mm (13.5")
Width: 275mm (10.9")
Height: 255mm (10.1")
Weight: 3.8kg (8.4 lbs.

NOTE BOOK MANAGER L6

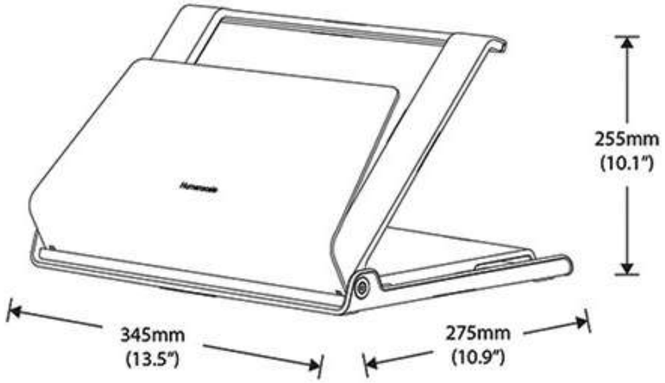

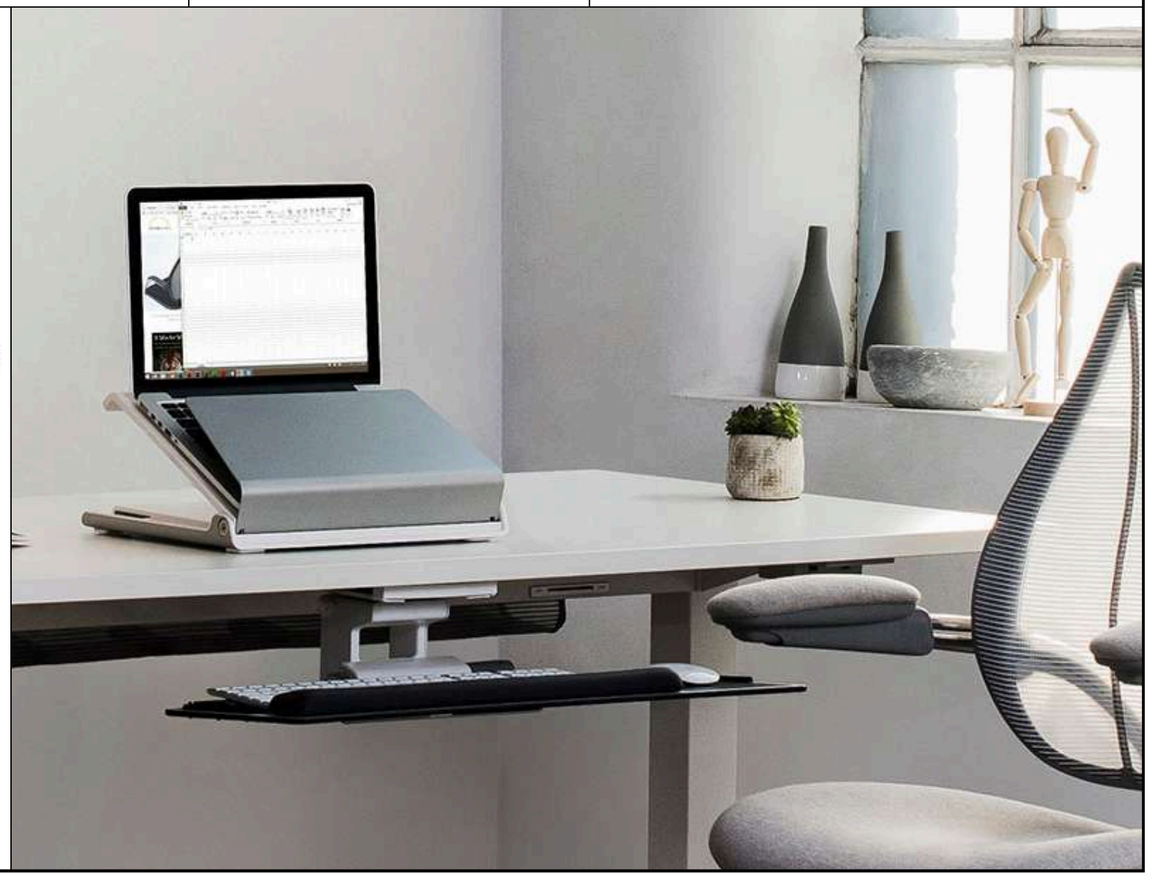

Ergonomic Office Tools

FOOT REST

CURVED LEG DESIGN ENCOURAGES ROCKING MOTION

PROVIDES SUPPORT FOR LOWER BACK

RUBBER, NON-SKID GRIPS KEEP FEET IN PLACE AND PROTECT HARD FLOORING

TECH SPECS

Product Weight: 2.7kg (6 lbs.)

FOOT REST - FM500 - BLACK

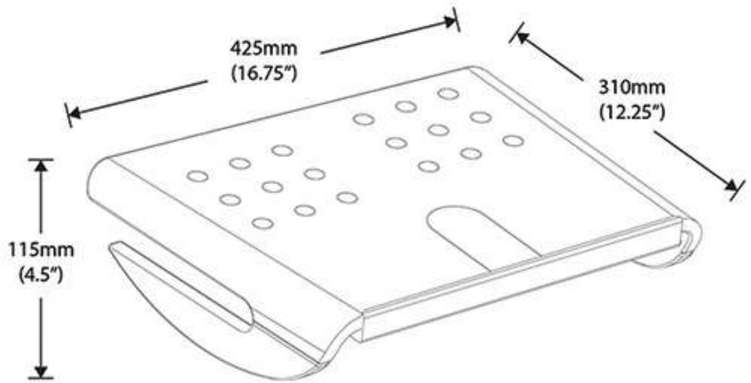

Ergonomic Office Tools

NEATLINKS

LARGE 17", GRAY

SMALL 17", GRAY

SMALL 24", GRAY

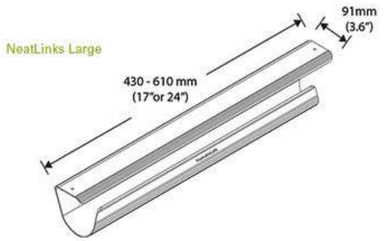

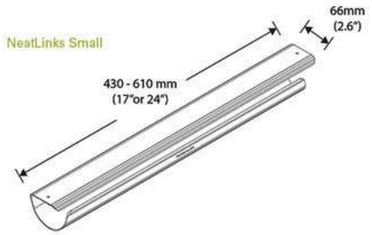

Ergonomic Office Tools

NEAT TECH - MINI BASKET

NEAT TECH - SMALL BASKET

NEAT TECH - LARGE BASKET

GREY BASKET, GREY TRIM

NEAT TECH

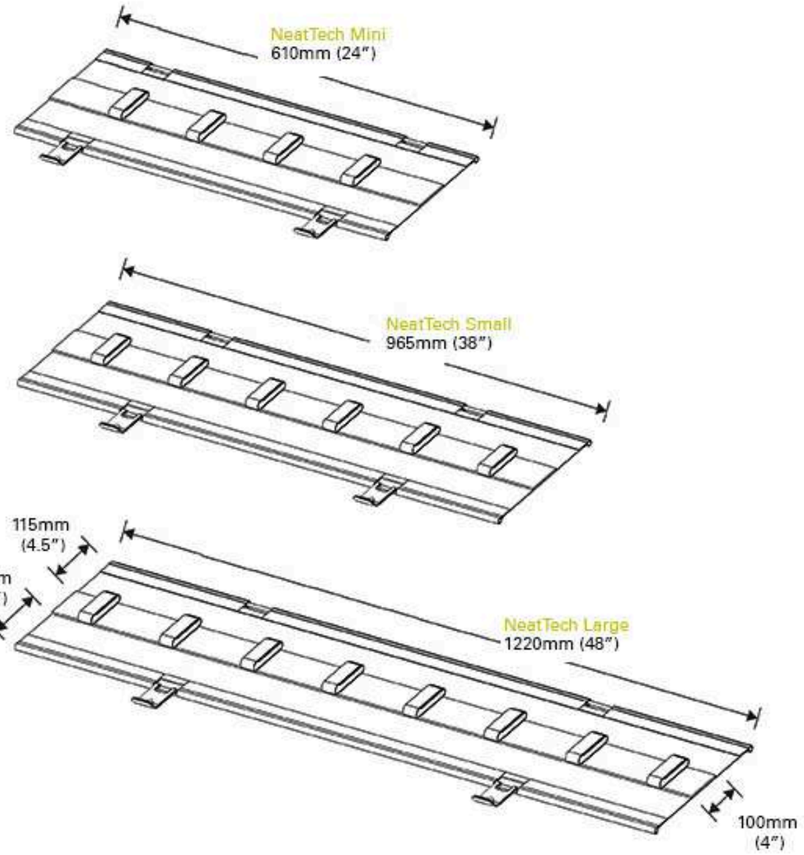

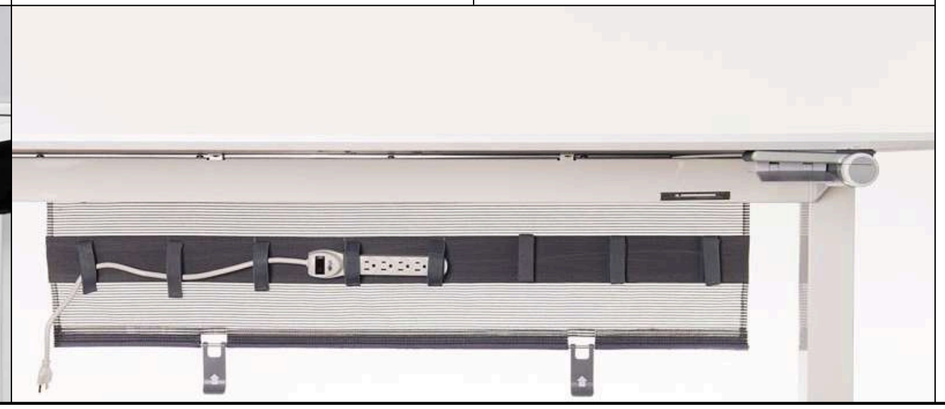

Sit-Stand Desks & Solutions

QUICK STAND HEAVY MOUNT

SOLID, STABLE PRODUCT

CLEAN VISUAL AESTHETIC

EASY TO OPERAT

QuickStand makes sit-to-stand easy and portable. With the ability to move with or independently of the screen, QuickStand's lightweight platform allows the desk to adapt to the user's changing comfort demands. Unlike other height adjustable solutions on the market, QuickStand can effortlessly be moved from one work surface to another.

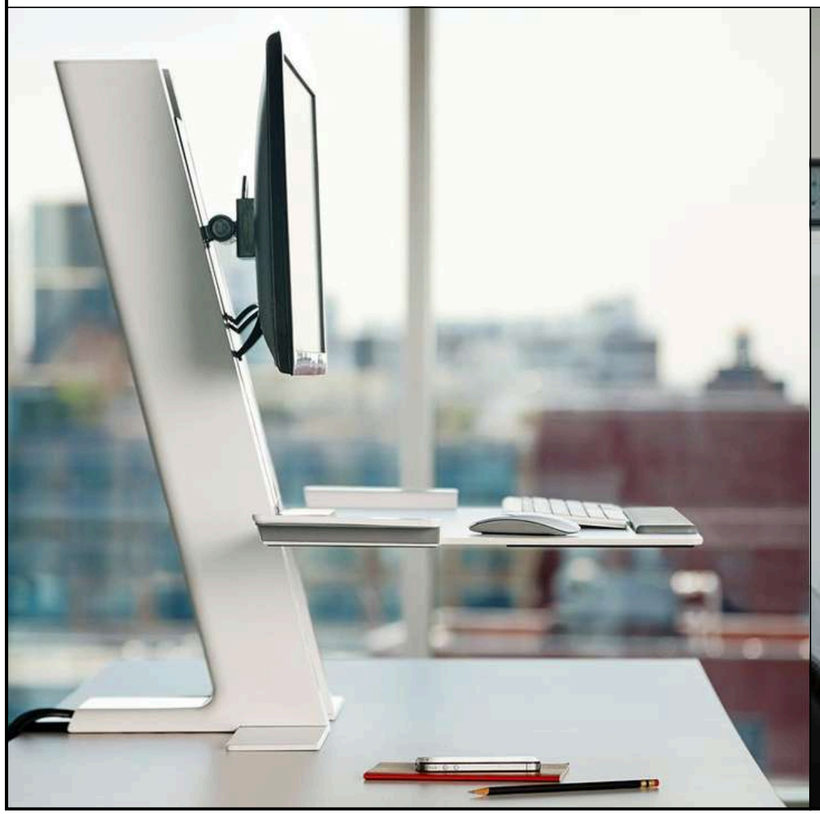

Sit-Stand Desks & Solutions

LARGE PLATFORM - SINGLE

ARGE PLATFORM - DUAL WIDE CROSSBAR

QUICK STAND HEAVY MOUNT

TECH SPECS

Unit Height – 710mm (28”)
Unit Width – 710mm (28”)
Unit Depth – 700mm (29”) (Small Platform) 900mm (36”) (Large Platform)
Monitor Height Adjustment – 127mm (5”)
Platform Height Adjustment – 460mm (18”)
Max Monitor Width – 610mm (24”)
Max Total Monitor(s) Weight – 11.3kg (25 lbs.)

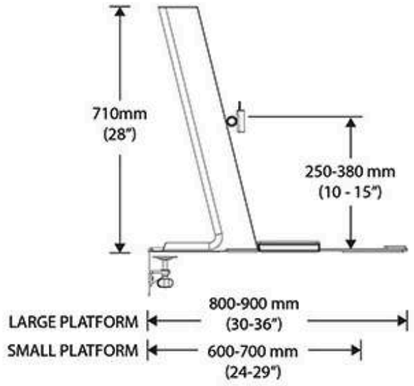

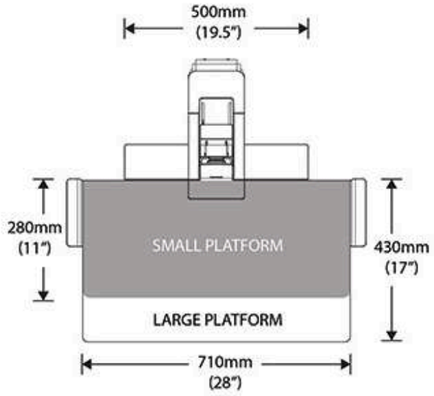

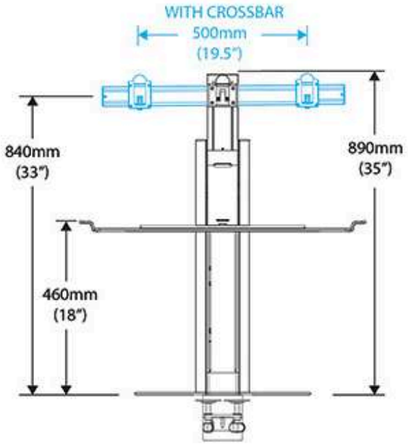

Sit-Stand Desks & Solutions

QUICKSTAND ECO

S OPTIMAL ERGONOMICS WITH HEIGHT-ADJUSTABLE FUNCTIONALITY

DESIGNED WITH A MINIMAL, CLEAN AESTHETIC

MADE ONLY WITH HEALTHY, SUSTAINABLE MATERIALS

Practical for home and corporate offices, QuickStand Eco is compatible with Humanscale's best-selling line of monitor arms. This revolutionary product helps you bring ergonomic comfort and wellness right to your workspace.

Sit-Stand Desks & Solutions

SINGLE MONITOR

DUAL MONITOR

QUICKSTAND ECO

TECH SPECS

H 711mm (28") (in resting position) x W 711mm (28”) x D 724mm (28.5”)

Work Surface:
W 710mm (28") x D 483mm (19")
Minimum Desk Required - 737mm (29")

Laptop 17.5kg (38.5 lbs.)
Single Monitor 19.2kg (42.3 lbs.)
Dual Monitor 20.5kg (45 lbs.)

Product Weight with Box:
Laptop 23.2 kg (51.2 lbs.)
Single Monitor 24.9 kg (55.0 lbs.)
Dual Monitor 26.2 kg (57.7 lbs.)

Vertical monitor adjustment - 127mm (5")
Total height range - 472mm (18.6")

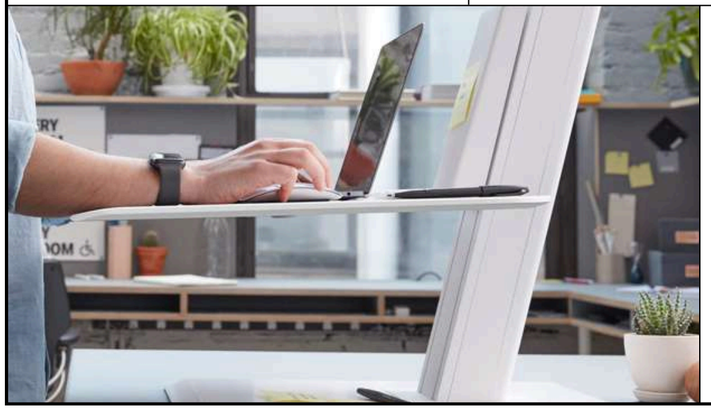

LAPTOP

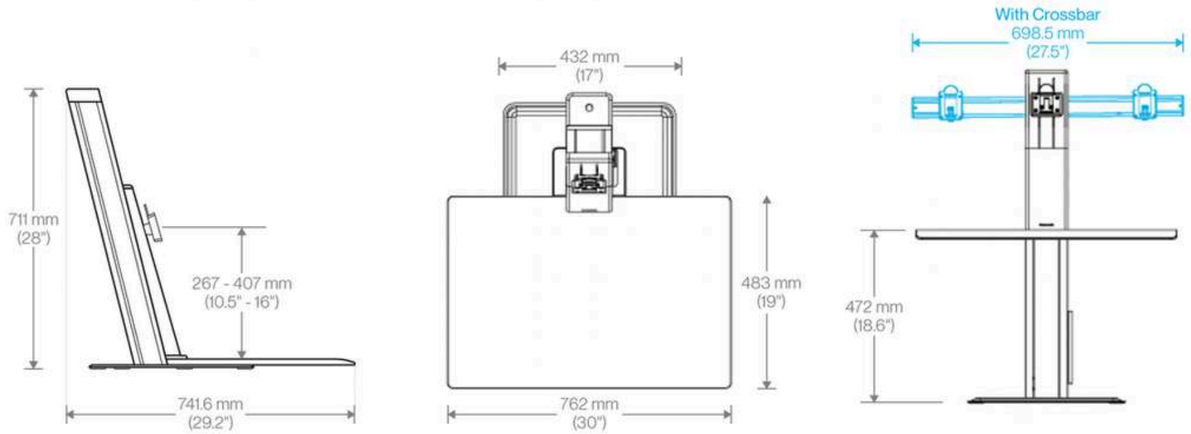

Sit-Stand Desks & Solutions

FLOAT TABLE

The key to remaining healthy while at work is to alternate between standing and sitting positions. Float makes standing almost effortless and instant. By eliminating awkward cranks and noisy, slow motors, Float removes obstacles that typically discourage the use of height-adjustable desks. Operating Float is as easy as standing up.

Sit-Stand Desks & Solutions

FLOAT TABLE

TECH SPECS

Unit Height: 680 - 1200 mm (27” – 47”)
Unit Width: 1200mm (47”) (Small Base) 1450mm (57”) (Large Base)
Unit Depth: 21.9” (Small Base) 29.1” (Large Base)
Height Adjustment: 508mm (20”)
Max Weight Capacity: 75kg (165 lbs.)
Table Top Width Range: 1200 - 1800 mm (47” – 72”)
Table Top Depth Range: 600 - 800 mm (24” – 30”)

1200 * 600

1200 * 750

1500 * 750 - UPTO 1800

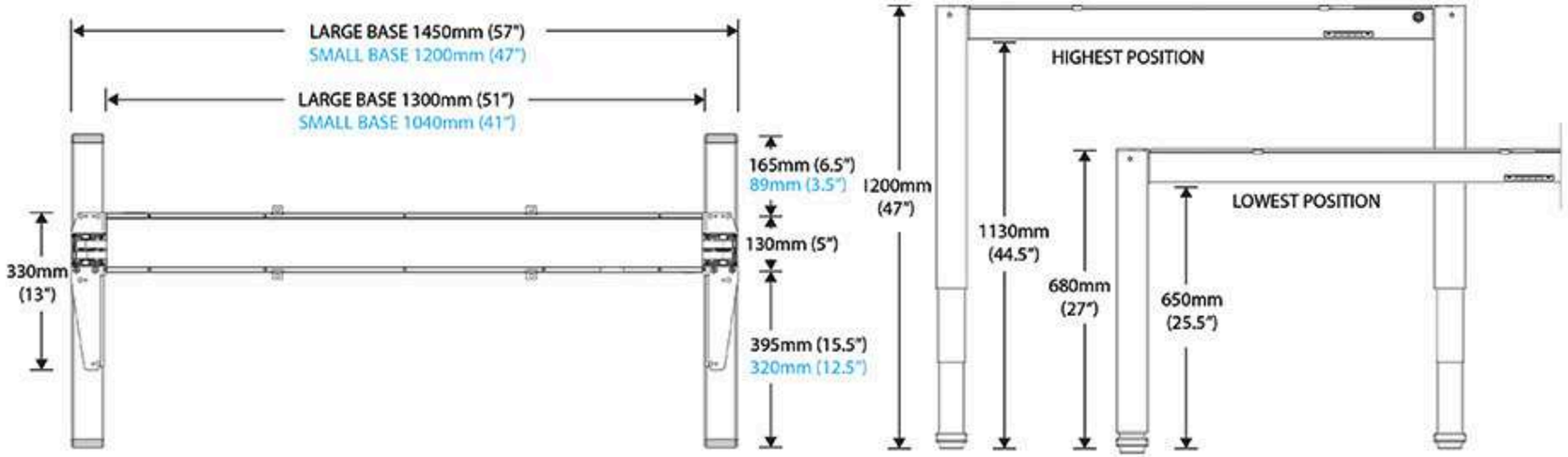

Thank You